Sectionalizing Strategies for Minimizing Outage Durations of Critical Loads in Parallel Power System Restoration

Weijia Liu[1], Zhenzhi Lin[1], Fushuan Wen[1,2], C. Y. Chung[3], Yusheng Xue[4], Gerard Ledwich[2]

[1] *School of Electrical Engineering, Zhejiang University, Hangzhou 310027, China*
[2] *School of Electrical Engineering and Computer Science, Queensland University of Technology, Brisbane, Queensland 4001, Australia*
[3] *Department of Electrical Engineering, Hong Kong Polytechnic University, Hung Hom, Hong Kong*
[4] *State Grid Electric Power Research Institute, Nanjing 210003, China*

Abstract: Fast restoration of critical loads and non-black-start generators can significantly reduce the economic losses caused by power system blackouts. In a parallel power system restoration, the sectionalization of restoration subsystems plays a very important role in determining the pickup of critical loads before synchronization. Most existing research mainly focuses on the startup of non-black-start generators. The restoration of critical loads, especially the loads with cold load characteristics, has not yet been addressed in optimizing the subsystem divisions. As a result, sectionalized restoration subsystems cannot achieve the best coordination between the pickup of loads and the ramping of generators. In order to generate sectionalizing strategies considering the pickup of critical loads in parallel power system restoration scenarios, an optimization model considering power system constraints, the characteristics of cold load pickup and the features of generator startup is proposed in this paper. The global-best harmony search (GHS) is employed to solve this optimization model. Initial sectionalizations with temporal information and several optimizing strategies considered are also introduced to accelerate the optimization procedure. The proposed sectionalizing strategy has been validated with the New-England 39-bus system and the IEEE 118-bus system. Further comparisons with some existing methods are carried out as well.

Keywords: power system restoration, parallel restoration, sectionalization of subsystems, cold load pickup, harmony search

1. INTRODUCTION

Despite the fact that modern power systems operate in feasible and reliable environment under the supervision of advanced protection devices and control technologies, it is still possible that they are exposed to cascading failures and large-area power outages. Several major blackouts have taken place in the past few years, such as the massive blackout in North America on August 14, 2003 [1] and a major disturbance in India in July, 2012 [2]. In order to minimize the economic losses caused by blackouts, the establishment of effective and rapid power system restoration strategies is becoming a very important issue [3]. Power system restoration has always been a complex and diverse problem due to the various dynamic characteristics, operating constraints and restoration objectives [4]. As a result, the entire power system restoration process is commonly divided into different stages, including startup of black-start (BS) generators, network reconfiguration, the resynchronization of islanded subsystems and the restoration of power loads. Considerable research has been done on various stages of power system restoration [4]-[13].

* Corresponding author at: Prof. Fushuan Wen, School of Electrical Engineering, Zhejiang University, Hangzhou 310027, China
E-mail address: fushuan.wen@gmail.com

The process of power system restoration always takes quite a long time because of lack of operational data and the complexity of system restoration itself [14]. Generally, in the early stage of restoration, the blackout area is divided into several restoration subsystems to accelerate the restoration speed before they can be synchronized. As a result, the power system restoration procedure will be significantly affected by the divisions of restoration subsystems and the restoration sequence of non-black-start (NBS) generators as well as critical loads. If the characteristics of cold load pick-up (CLPU) are considered, the balance between load restoration and generators' loading will become a more important issue for maintaining the stability of the newly restored system. However, most existing sectionalizing methods aim to build an optimized skeleton network or minimize the outage times of NBS generators, while the coordination of generator loading and critical load pickup have not been paid enough attention.

Generally, sectionalizing strategies are used in two aspects in power systems: preventing cascading failures and dividing restoration subsystems after a blackout. Whenever the system operators detect a potential cascading event, sectionalizing strategies will be activated to separate the bulk system into controlled islands so as to prevent a global blackout [15]-[17]. In case that a blackout occurs, sectionalizing strategies can also help the operators to accelerate the restoration procedure. This paper focuses on sectionalizing strategies during the initial stage of power system restoration that ensure the generating units and outage loads resume working as fast as possible, after a global power failure. A mixed integer non-linear programming (MINLP) model aiming at minimizing the outage durations of critical loads is presented in this paper, and the global-best harmony search (GHS) employed to solve. In addition, several optimization strategies and simplifications are used to speed up the solving procedure.

The remainder of this paper is organized as follows. Section 2 formulates the optimization model with the characteristics of cold load pick-up (CLPU) and NBS start-up considered. In Section 3, the GHS method and improvisation strategies are given. Section 4 presents the simulation results of the New England 39-bus system and IEEE 118-bus system, and comparisons with some existing methods carried out. Conclusions are presented in Section 5.

2. Formulations of Sectionalizing Strategies

2.1. Characteristics of CLPU and generator loading

When BS generators resume working after a global blackout, most automatic control devices are under manual control, the coordination of power load and generator loading is closely related to startup characteristics of power loads, NBS generating units and the frequency response of prime movers [14].

2.1.1 Characteristic of load pickup

Appropriate magnitude of load pickup during restoration helps keep the stability of power system and coordination with loading of generators. In actual power systems, most loads are supplied by a distribution system concerned, instead of a high-voltage transmission system. Thus, the available load capacity directly connected with the transmission system may not be sufficient to coordinate the ramping of generating units. As a result, once a bus in the transmission system is restored, the local distribution system operator should carry out switching operations to integrate critical loads into the newly restored transmission system following the control signal issued by the transmission system operator [18].

Typically, the pickup of power loads results in a peak demand inrush of both active and reactive power. This characteristic known as CLPU is applicable to loads such as air conditioners, electrical heating and refrigerating devices. The characteristic of CLPU must be considered strictly in making restoration plans. Otherwise the overload effect can threaten the stability of the power system in restoration. In this work, all critical loads in the blackout area are assumed to have cold load features.

The behavior of CLPU is a complex process concerned with environment temperature, outage duration and mechanism of cold load devices [19], etc. A simplified power consumption characteristic for CLPU is demonstrated in Eqn. (1) [20]. Assume a cold load with rating active power of $P_{CL,N}$ is reintegrated into the restored subsystem at time T_{S0}, and the practical active power consumption of this load is denoted as $P_{CL,t}$ at time t. During the period from T_{S0} to T_{S1}, a peak power consumption estimated as $K_cP_{CL,N}$ is caused by the effect of CLPU and K_c denotes the overload coefficient of CLPU. The overload effect of CLPU decays after T_{S1} and gradually ends by time T_{S2}. However, a certain amount of loads could not be integrated right at time T_{S0} due to the delay of both breaker operations and the response of electricity consumers. Thus, after the overload effect of CLPU finishes, it still takes some time when the power consumption stabilizes at its nominal value $P_{CL,N}$. As shown in Eqn. (1), the load demand slightly increases from $K_sP_{CL,N}$ to the nominal load $P_{CL,N}$ during the period T_{S2} to T_{S3}, and K_s denotes the delay coefficient of load pickup.

$$P_{CL,t}=\begin{cases} 0 & t<T_{S0} \\ K_cP_{CL,N} & T_{S0}\le t<T_{S1} \\ \dfrac{K_c(T_{S2}-t)+K_s(t-T_{S1})}{T_{S2}-T_{S1}}P_{CL,N} & T_{S1}\le t<T_{S2} \\ \dfrac{K_s(T_{S3}-t)+(t-T_{S2})}{T_{S3}-T_{S2}}P_{CL,N} & T_{S2}\le t<T_{S3} \\ P_{CL,N} & t\ge T_{S3} \end{cases} \tag{1}$$

Meanwhile, the reactive power consumption characteristic of CLPU cannot be ignored as it affects the system's reactive power balance and stability of voltages. In this paper, the reactive power consumption characteristic of CLPU is assumed to be the same as that of active power. The rating reactive power of the cold loads is denoted as $Q_{CL,N}$, then the reactive power consumption at time t which is denoted as $Q_{CL,t}$ can also be obtained through overload coefficient and the delay coefficient are represented by K_{qc} and K_{qs}, respectively.

2.1.2 Startup features of NBS generators

Generating units with BS capabilities will restart first after a blackout. However, NBS generators cannot resume normal operations without startup energies. Moreover, it still takes a certain period of time until the NBS generators are able to output power after they are energized. Generally, the duration of generator startup process varies with the type of generators [21], [22]. In this paper, all the NBS generators are assumed to be thermal generators, and the simplified startup feature of thermal generating units is illustrated in Eqn. (2) [4].

$$P_{G,t}=\begin{cases} 0 & t<T_{G0} \\ -P_{start} & T_{G0}\le t<T_{G1} \\ -P_{start}+R_G(t-T_{G1}) & T_{G1}\le t<T_{G2} \\ P_{\max} & t\ge T_{G2} \end{cases} \tag{2}$$

Assume a NBS generating unit is cranked at time T_{G0}, and the active power output of the NBS generating unit at time t is denoted as $P_{G,t}$. From T_{G0} to T_{G1}, auxiliary equipment is restored and the preparations to start the blackout turbine are made. After the turbine start up at T_{G1}, the restored generator picks up the auxiliary loads step by step and is finally able to output power by continuous ramping with the ramping ratio of R_G. Ideally, the generator will keep ramping continuously until the maximum generation output is reached at T_{G2}. P_{start} and P_{max} denote the start-up power demand and the maximum generation output of the NBS generating unit, respectively.

2.2. Optimization model of subsystem divisions

The purpose of an optimal sectionalization is to minimize the outage duration of the critical loads before the synchronization of restoration subsystems. As a result, each black-start generating unit will form a restoration island before all the islands can be interconnected through synchronization operations.

For an *N*-bus power system with *M* black-start generators, *M* restoration subsystems can be divided. Assuming that a global outage occurs at time T_0=0, the objective function shown in (3), representing the weighted sum of outage durations of critical loads, is minimized with different restoration priorities.

$$\min \sum_{i=1}^{N} K_F(i) P_{CL,N}(i) \Delta T_L(i) \tag{3}$$

where $P_{CL,N}(i)$, $\Delta T_L(i)$ and $K_F(i)$ are the nominal active power of critical load with cold load characteristic, outage duration of critical load and the importance coefficient of critical load at transmission node *i*, respectively.

Power system security constraints must be strictly respected in optimizing the sectionalization of subsystems due to the fragile nature of the newly restored system. The following constraints are considered.

1) Constraints of multi-period power flow equations:

$$P_{G(i,t)} = P_{L(i,t)} + U_{i(t)} \sum_{j \in \Omega_m} U_{j(t)} (G_{ij(t)} \cos\theta_{ij(t)} + B_{ij(t)} \sin\theta_{ij(t)}) \tag{4}$$

$$Q_{G(i,t)} = Q_{L(i,t)} + U_{i(t)} \sum_{j \in \Omega_m} U_{j(t)} (G_{ij(t)} \sin\theta_{ij(t)} - B_{ij(t)} \cos\theta_{ij(t)}) \tag{5}$$

where $i, j = 1, 2, ..., N$, $m = 1, 2, ..., M$; $U_{i(t)}$ denotes the voltage magnitude of bus *i* at time *t*; $G_{ij(t)}$ and $B_{ij(t)}$ stand for real and imaginary part of the nodal admittance matrix between node *i* and *j* at time *t*, respectively; $\theta_{ij(t)}$ represents the deviation of phase angle between node *i* and *j* at time *t*; Ω_m denotes the set of nodes in restoration subsystem *m*; $P_{G(i,t)}$, $P_{L(i,t)}$, $Q_{G(i,t)}$ and $Q_{L(i,t)}$ represent the active power generation output, active power consumption of critical loads, reactive power generation output and reactive power consumption of critical load located at node *i* at time *t*, respectively. According to the characteristic of CLPU and generating start up, $P_{G(i,t)}$, $P_{L(i,t)}$, $Q_{G(i,t)}$ and $Q_{L(i,t)}$ can be obtained from Eqns. (1) and (2). The power flow constraints demonstrated in (4) and (5) have to be applied to all transmission nodes in the same restoration subsystem *m*.

2) Bus voltage constraints:

$$U_{i,\min} \le U_{i(t)} \le U_{i,\max} \tag{6}$$

where $U_{i,\max}$ and $U_{i,\min}$ denote the maximum and minimum acceptable voltage magnitudes of bus *i*, respectively.

3) Frequency stability constraints:

Typically, the outage time of critical loads will always be prolonged than scheduled because of the limited capabilities of the newly recovered power system. As a result, coordination of load pickup, startup features of generators and response of prime movers is another important constraint in sectionalizing optimization, as shown in (7).

$$\left| \sum_{i \in \Omega_m} P_{G(i,t)} - \sum_{i \in \Omega_m} P_{L(i,t)} \right| \le K_f(m) \Delta f_{\max} \tag{7}$$

where $K_f(m)$ denotes frequency response characteristic of generators in subsystem *m*; $\Delta f_{\max}$ represents the maximum acceptable frequency deviation. The constraint in (7) must be accommodated for all $t \ge T_0$.

4. Constraints of active and reactive power generation:

$$P_{Gi,\min} \le P_{G(i,t)} \le P_{Gi,\max} \tag{8}$$

$$Q_{Gi,\min} \le Q_{G(i,t)} \le Q_{Gi,\max} \tag{9}$$

where $P_{Gi,\max}$, $P_{Gi,\min}$, $Q_{Gi,\max}$, and $Q_{Gi,\min}$ denote the maximum and minimum active power output and the maximum and minimum reactive power output of generators at node *i*, respectively.

5. Constraints of power transmission:

$$S_{i-j,t} \le S_{i-j,\max} \tag{10}$$

where $S_{i-j,t}$ and $S_{i-j,\max}$ represent the apparent power through transmission line *i-j* at time *t* and the maximum transmission limit of line *i-j*, respectively. $S_{i-j,t}$ can be obtained from the following equations.

$$S_{i-j,t} = \sqrt{P_{i-j,t}^2 + Q_{i-j,t}^2} \tag{11}$$

$$P_{i-j,t} = U_{i(t)}^2 G_{ij(t)} - U_{i(t)} U_{j(t)} (G_{ij(t)} \cos\theta_{ij(t)} + B_{ij(t)} \sin\theta_{ij(t)}) \tag{12}$$

$$Q_{i-j,t} = -U_{i(t)} U_{j(t)} (G_{ij(t)} \sin\theta_{ij(t)} - B_{ij(t)} \cos\theta_{ij(t)}) \frac{1}{2} U_{i(t)}^2 C_{ij} - U_{i(t)}^2 B_{ij(t)} \tag{13}$$

where C_{ij} stands for the charging susceptance of branch *i-j*.

3. GHS Based Optimization Methods

3.1. The global-best harmony search methodology

The optimization model presented in Section 2 is a non-linear alternating current optimal power flow (ACOPF) problem. The value of $\Delta T_L(i)$ are closely related to the sectionalization results, which are represented as integer parameters. Let **A** and **S** respectively denote the adjacency matrix and sectionalization result matrix, i.e.,

$$\mathbf{A} = [a_{ij}]_{N\times N} \tag{14}$$

$$\mathbf{S} = [s_{mj}]_{M\times N} \tag{15}$$

where

$$a_{ij} = \begin{cases} 1, & i \text{ and } j \text{ are directly connected} \\ 0, & \text{otherwise} \end{cases}$$

$$s_{mj} = \begin{cases} 1, & j \text{ belongs to subsystem } m \\ 0, & \text{otherwise} \end{cases}$$

The sectionalization results must be reasonable, or in other words, the network topology must be respected. Define the judgment matrix **J** as

$$\mathbf{J} = (\mathbf{S} \oplus (\mathbf{S} \wedge (\mathbf{SA})))\mathbf{S}^{\mathrm{T}} \tag{16}$$

where **J** is an $M \times M$ matrix; $\oplus$ represents the logical operation of exclusive disjunction, and $\wedge$ the logical operation of conjunction. If **J** contains non-zero elements, the sectionalization results in **S** are considered as an impractical one, and vice-versa.

Since each substation can only be divided into one restoration subsystem, an integer decision-making variable with the sectionalization information will be introduced to transform the optimal division model into a MINLP model. The well-established global-best harmony search (GHS) algorithm [23,24] is employed to solve this optimization model. The details of the GHS algorithm will not be addressed here, and are available in [23,24]. The GHS based algorithm for optimizing the subsystem divisions mainly consists of the following steps:

1) Initialize the harmony memory which contains initial sectionalization solutions of subsystem divisions, and the size of solutions in harmony memory is denoted as HMS. To accelerate the solving process, the initial solutions will be obtained based on the temporal information of restoration operations explained in subsection III.B.

2) Improvise a new harmony to generate new sectionalization solutions by considering the harmony memory consideration rate (HMCR), pitch adjustment rate (PAR) and random selection. Detailed improvisation rules can be found in [23], and the improvisation strategies for parallel power system restoration problems are proposed in section III.C.

3) Update the harmony memory according to the objective function in (3), and terminate the improvisation progress when the termination criterion is satisfied, i.e. the specified maximum number of improvisation is reached or the objective function value has remained unchanged for a given number of iterations.

3.2. Initial sectionalization of subsystems

As a heuristic algorithm, the efficiency of GHS in solving the optimal division of restoration subsystems mainly depends on the initial sectionalization results and improvisation strategies. Typically, the importance of transmission lines and substations are evaluated to form optimal initial results [25]-[29]. However, there are still no unanimous opinions on appropriate establishment of weights while evaluating the importance of transmission lines and nodes.

In order to minimize the economic losses after a major blackout, the restoration duration is employed here to form the initial sectionalization results as it directly indicates the restoration speed. Restoration duration is closely related to the complexity of switching operations during the stage of restoration subsystem islanding [30]. Generally, the required time duration of restoring a substation through a single line can be simplified as:

$$\Delta T_R = \Delta T_f + \Delta T_u + \Delta T_c \tag{17}$$

where ΔT_R, ΔT_f, ΔT_u and ΔT_c represent the time duration of the entire restoration process, duration of switching operations and relay reconfigurations, random delay caused by operational uncertainties and stabilization time of charging current, respectively.

The Dijkstra algorithm is chosen to sectionalize the blackout system into subsystems based on the temporal information in (17) that ensure the entire system is restored in the shortest duration. If the blackout happens at time T_0=0, the ideal restoration time of each node will be obtained by utilizing Dijkstra algorithm, and can be expressed by as:

$$\mathbf{T} = \begin{bmatrix} T_{11} & T_{12} & \cdots & T_{1M} \\ T_{21} & T_{22} & \cdots & T_{2M} \\ \vdots & \vdots & \ddots & \vdots \\ T_{N1} & T_{N2} & \cdots & T_{NM} \end{bmatrix} \tag{18}$$

where $\mathbf{T}$ denotes the matrix of ideal outage durations of each node by different restoration subsystems, T_{im} denotes the ideal restoration time of outage node i through restoration subsystem m, and i=1,2,…,N; m=1,2,…,M. Thus, if i is allocated into subsystem m, the aforementioned model should also consider the temporal constraints of restoration operations, shown as:

$$\Delta T_L(i) \geq T_{im} \tag{19}$$

Particularly, if the BS generator of restoration subsystem m is located at node i, T_{im} is the self-start time duration of the BS generators at node i. An initial subsystem division can be easily obtained by using the ideal restoration time in $\mathbf{T}$. Each outage node will first be allocated into the subsystem with the minimum restoration time, and then the restoration paths will be formed based on the division of outage nodes. The initial sectionalization results are denoted as $\mathbf{S_0}$.

Moreover, the restoration operations of each subsystem are simplified by ignoring unnecessary transmission paths and substations while the outage duration of NBS generating units and critical loads should not be prolonged. Let $\mathbf{B_0}$=[b_1, b_2,…, b_N]

and $\mathbf{F}=[f_1, f_2,\ldots, f_N]$ denote the vector of the initial status of the blackout system and the vector of critical loads as well as the generating units, respectively. If a BS generating unit is located at node i, $b_i=1$; otherwise, $b_i=0$. Either a critical load or a generating unit is located at node i, then $f_i=1$; otherwise, $f_i=0$. The simplifications can be done by the following steps:

1) Form the restoration sequence matrix $\mathbf{Q}$, and $\mathbf{Q}^{\mathrm{T}}=[\mathbf{B_0}^{\mathrm{T}}, \mathbf{AB_0}^{\mathrm{T}},\ldots, \mathbf{A}^l\mathbf{B_0}^{\mathrm{T}}]$. l represents the number of restoration path steps. Let $\mathbf{E}=[1, 1,\ldots, 1]$ be an $1\times(l+1)$ vector. If the equation in (20) doesn't hold, set $l=l+1$ until (20) holds.

$$\mathbf{F} = (\mathbf{EQ}) \wedge \mathbf{F} \tag{20}$$

2) If neither a critical load nor a NBS generator is located at j, the restoration of j might be unnecessary, $j=1,2,...,N$. Eqn. (21) is used to examine the necessity of restoring node j. If (21) holds, restoring node j is optional and will not affect the restoration of critical loads and NBS generators.

$$\mathbf{F} = (\mathbf{E}(\mathbf{Q} - \mathbf{QID}^{\mathrm{T}}\mathbf{DA})) \wedge \mathbf{F} \tag{21}$$

where $\mathbf{D}=[d_1,d_2,\ldots d_N]$ is a unit vector, and $d_j=1$; $\mathbf{I}$ is an $(l+1)\times(l+1)$ matrix, as shown in (22).

$$\mathbf{I} = \begin{bmatrix} \mathbf{0} & 0 \\ \mathbf{Diag}(l) & \mathbf{0} \end{bmatrix} \tag{22}$$

where $\mathbf{Diag}(l)$ represents a unit matrix of size l.

3) If the restoration of node j is optional, the updated sequence matrix $\mathbf{Q}$ can be obtained by

$$\mathbf{Q} = \mathbf{Q} - \mathbf{QID}^{\mathrm{T}}\mathbf{DA} - \mathbf{QD}^{\mathrm{T}}\mathbf{D} \tag{23}$$

3.3. Improvisation strategies in GHS

The pickup of critical power loads and restoration of NBS generators may not proceed as fast as it is designed due to the limitation of power system stability. As a result, outage durations of critical loads and NBS generators are prolonged to accommodate the operating constraints. To reduce the complexity of optimization, priorities of outage duration modification are listed as follows:

1) Postpone the pickup of power loads;

2) Postpone the restoration of NBS generators;

3) Postpone the restoration of a transmission path or a substation.

The pickup of power loads has higher priority to be delayed compared with the restoration of generators because startup of blackout generators overweighs other considerations. The delay of transmission path or substation restoration is not considered unless postponement of both the critical load pickup and the restoration of generators cannot make the subsystem stable as this postpones all restoration operations afterwards.

Besides, modification of outage durations affects sectionalization of restoration subsystems. For example, when a critical load located at node i has been divided into restoration subsystem j in the initial sectionalization first, the lowest boundary of $\Delta T_L(i)$ is set to T_{ij}, according to the result in (18). After modification of restoration time considering power system constraints, $\Delta T_L(i)$ is increased to T_{ij}^*. If the modified outage duration T_{ij}^* remains the minimum among all ideal outage times through other restoration subsystems, sectionalization results of node i are not changed. Otherwise, sectionalization of node i is regarded as an optional node. Let Ω_{O} denotes the set of optional nodes in the blackout system, used to guide the optimization of subsystem divisions.

The optional nodes in Ω_{O} are used when new sectionalization solutions are improvised in GHS. Furthermore, the improvised sectionalizations must respect the topological characteristic of the system as represented by (16).

4. SIMULATION RESULTS

To illustrate the validity of the proposed sectionalizing optimization model, the New-England 39-bus system and the IEEE standard 118-bus system served as test cases. Two restoration priority levels are used to define the importance of power loads in (3), and $K_F(i)$ corresponding to the priority level I and II are set to be 1.0 and 0.3, respectively. The parameters of the GHS algorithm are set as HMS=20, HMCR=0.9, PAR=0.1. The characteristics of CLPU and generator startup in both cases are shown in Table 1.

Table 1. Characteristics of CLPU and generator start up

T_{S1}–T_{S0}	10 (min.)	K_c	2.0
T_{S2}–T_{S1}	10 (min.)	K_{qc}	3.0
T_{G1}–T_{G0}	10 (min.)	K_s, K_{qs}	0.8

Table 2. Characteristics of generating units in New-England 39-bus system

Bus No.	Type	P_{max} (p.u.)	Ramping Ratio (p.u./h)	P_{start} (p.u.)	$Q_{G,\min}$ (p.u.)	$Q_{G,\max}$ (p.u.)
30	BS	10.4	2.40	0.0	–2.0	4.0
31	BS	5.0	1.50	0.0	–0.5	3.0
32	NBS	7.25	1.80	0.25	–0.5	2.5
33	NBS	6.52	1.50	0.25	–1.0	3.0
34	NBS	5.08	1.35	0.20	–0.5	1.5
35	BS	6.87	1.50	0.0	–1.0	3.0
36	NBS	5.8	1.50	0.25	–1.5	2.4
37	NBS	5.64	1.25	0.20	–1.5	2.5
38	NBS	8.65	2.10	0.30	–1.0	3.0
39	NBS	11.0	2.50	0.35	–2.5	4.5

Table 3. Characteristics of critical loads in New-England 39-bus system

Bus No.	Active/Reactive Load (p.u.)	Priority Level	Initial Restored Time (min)	Optimal Restored Time (min)
1	0.15/0.10	II	27.9	27.9
3	0.46/0.22	I	26.1	26.1
4	0.58/0.17	II	**32.0**	41.1
7	0.50/0.23	II	28.5	28.5
8	0.73/0.49	I	33.8	33.8
15	0.36/0.25	II	**42.8**	69.7
16	0.48/0.19	II	70.6	**46.3**
18	0.43/0.22	I	70.8	**31.9**
20	1.07/0.32	II	84.4	**83.3**
21	0.29/0.20	II	34.0	**31.1**
23	0.33/0.19	I	30.8	30.8
24	0.51/0.21	II	**37.3**	41.0
25	0.16/0.11	II	25.6	25.6
26	0.08/0.05	II	35.4	**32.8**
27	0.40/0.27	I	76.7	**64.2**
28	0.26/0.09	II	**66.3**	74.4
29	0.52/0.28	I	45.1	**44.6**
39	1.14/0.38	II	80.3	**64.2**

4.1. New-England 39-bus system

This test case is based on a parallel power system restoration process in the New-England 39-bus system. Characteristics of generating units and critical loads are shown in Table 2 and 3, respectively.

Once a global blackout occurs at T_0=0 minute, BS generators in the system start to resupply their auxiliary loads and then help restore the rest of the system. The startup speed of BS generators significantly influences the initial sectionalization results of restoration subsystems. In this test case, BS generators located at bus 30, 31 and 35 resume working at time 15, 18 and 20 minutes, respectively.

After modifying outage durations of all critical loads and NBS generators of the initial restoration subsystems, nodes 4, 8, 15, 16, 18, 27 and 39 are classified as optional nodes. In the GHS improvisation procedure, these optional nodes will be considered in the adjustment and random selection. After applying the proposed GHS methodology, initial divisions of nodes 4, 15 and 27 are rescheduled while divisions of other optional nodes remain unchanged. In the optimal divisions, the objective value in (3) is reduced from 3.75 h to 3.34 h, and this means that the weighted sum of the outage duration of both critical loads is reduced by 10.9%. The average outage duration of critical loads with the priority level I is reduced by 8.6 min, while that of loads with the level II priority slightly increases by 0.1 min. The initial and the optimized subsystem division results of the New-England 39-bus system are as shown in Figure 1(a) and 1(b), respectively.

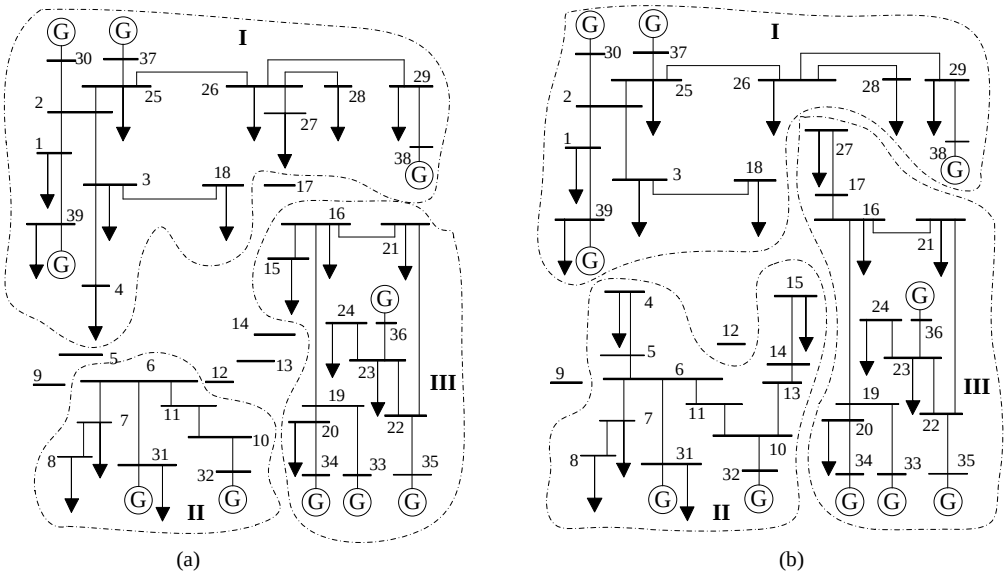

Figure 1. *Sectionalization results of the New-England 39-bus system: (a) the initial subsystem divisions; (b) the optimized subsystem divisions*.

Not all the outage durations of critical loads can be reduced due to constraints of system security and generators' loading levels, as shown in Table 3. Several loads with lower priority have to suffer more outage time in order to speed up the restoration of NBS generators and more important loads.

As can be seen from Figure 1, transmission substations at bus 9 and 12 have not been sectionalized to any restoration subsystems. The reason is that the absence of these nodes will not affect the restoration process of critical loads and NBS generators and at the same time the number of restoration operations is reduced, according to (20)-(23). During the restoration process, bus voltages in the New-England 39-bus system are kept within the range of 0.9~1.1 p.u.. The active power output curves of each subsystem cannot increase steadily due to the discrete pickup of cold load and the startup features of NBS generators, as shown in Figure 2.

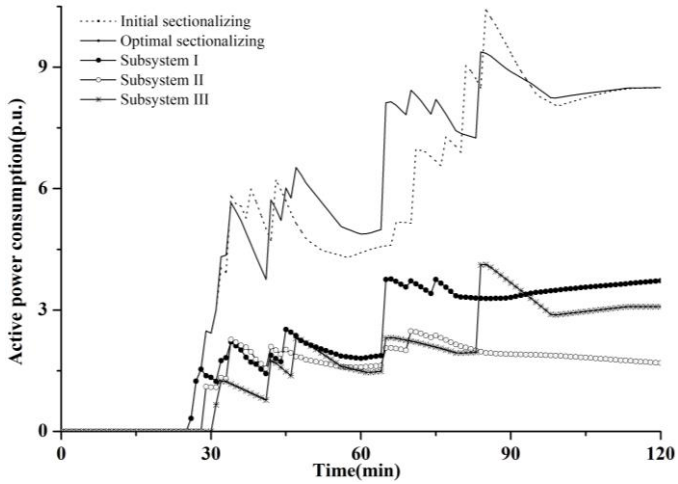

Figure 2. *Active power output of each restoration subsystem and comparison of total active power outputs of the optimized results and initial results*.

4.2. IEEE 118-bus system

The standard IEEE 118-bus system data are adopted to test the effectiveness of the proposed sectionalizing method in a relatively larger system restoration cases. Five generators located at bus 12, 25, 59, 66 and 100 are assumed to be BS generators and they resume normal operations at 15, 10, 25, 20 and 15 minutes after the blackout happens, respectively.

Figure 3 shows sectionalization results of restoration subsystems after optimization by the proposed model. The differences between the initial subsystem divisions and the optimized ones are listed in Table 4. After applying the proposed optimization model, the objective function value in (3) is reduced by 18.2%, i.e. from 4.67 h to 3.82 h. The average outage durations of critical loads with the priority level I and II are reduced by 8.5 min and 12.4 min, respectively. Despite that the decrease of outage durations of the most important loads with the priority level I is not as much as that of loads with the priority level II, the average outage duration of NBS generating units is significantly reduced from 38.4 minutes to 33.9 minutes.

Table 4. Differences between the optimized and initial subsystem divisions in IEEE 118-bus system

Bus No.	Initial Division	Optimized Division	Bus No.	Initial Division	Optimized Division
19	I	II	76	V	IV
34	I	II	77	V	IV
36	I	II	78	V	IV
39	II	IV	79	V	IV
60	III	IV	80	V	IV
75	II	IV	118	II	IV

4.3. Comparisons and Discussions

The effectiveness of the proposed method is compared with other methods for parallel restoration subsystem divisions in [26,27,29]. Comparisons are carried out for the test case of the IEEE 118-bus system, and the average outage duration of NBS generators and critical loads are used as comparison indexes, as listed in Table 5. The total active power consumptions during the restoration procedure by using different methods are shown in Figure 4.

As shown in Table 5, the obtained outage durations of NBS generating units by employing different sectionalizing methods do not have much difference, because the fast restoration of NBS units is always the major objective of power system restoration. In term of restoring critical loads, however, the proposed method shows significant advantages over the others. In

practice, it is reasonable for system operators to pick up only a few important loads in the islanded stage of power system restoration, since the restored system is still weak and has limited generation capacity. In the proposed method, since different restoration priorities are defined, the critical loads with level I priority can be picked up much faster, compared with the other methods.

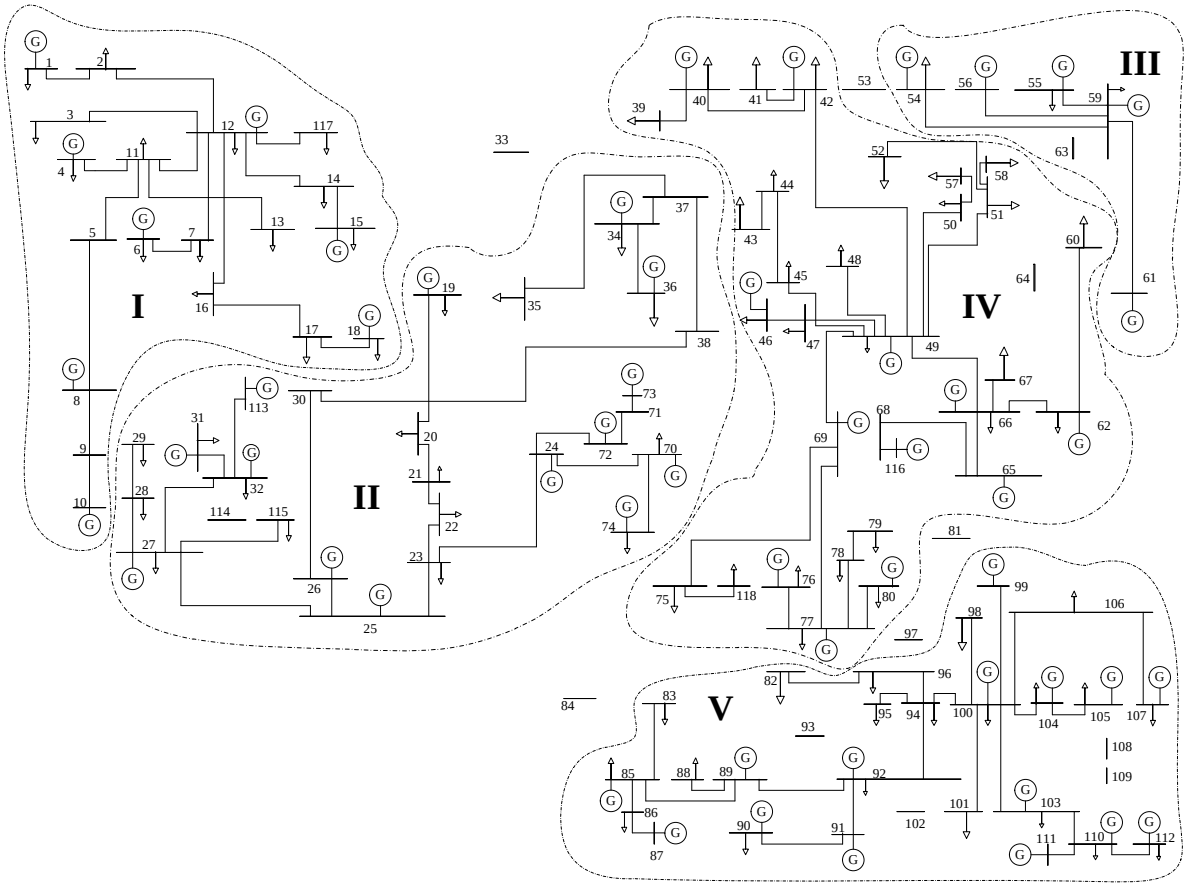

Figure 3. *The optimized sectionalization results of the IEEE 118-bus system*.

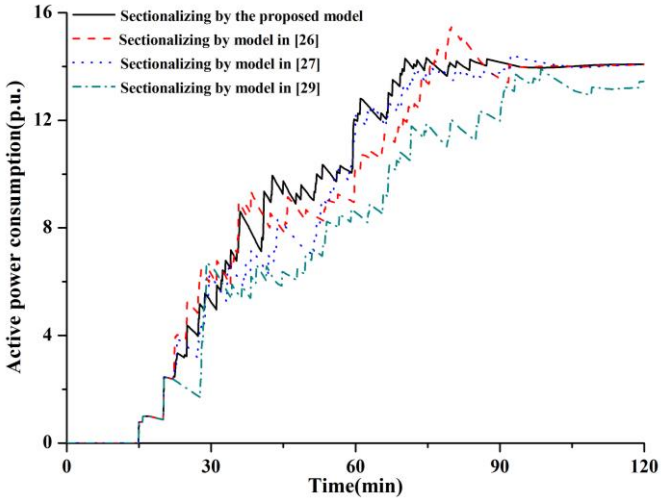

Figure 4. *Comparison of the total active power outputs of the sectionalization results in 118-bus system optimized by the proposed model and the other models in [26], [27] and [29]*.

Generally, the power loads after a blackout are unlikely to change continuously due to the operation of switches, characteristics of cold loads, lack of automatic control devices and unpredictable behaviors of electricity customers [18]. Thus, the pick-up characteristics of loads and the balance between generation and demand are the most important factors that will affect the restoration process and determine the loading of generators. This is the main reason why the average outage duration of critical loads vary much more significant than that of NBS generating units in Table 5. As shown in Figure 4, the total active power consumption increases faster by applying the method in [26] than the proposed method at the beginning, while the restoration speed turns slower afterwards. This is caused by the imbalance between the generators' ramping and the pickup of loads. Even though a substation supplying a critical load is restored, the load can still not be picked up until the total active power output of generating units in the restoration subsystem has reached a certain level.

Table 5. Comparisons of average outage durations between the proposed method and some other methods

Average Outage Duration	NBS Generators (min)	Critical Loads (min)	Level I Critical Loads (min)	Level II Critical Loads (min)
Proposed Method	33.9	50.2	32.0	51.6
Method in [26]	34.1	52.7	43.2	54.0
Method in [27]	34.8	54.6	41.2	55.6
Method in [29]	36.6	67.6	41.8	69.8

5. CONCLUSION

An optimization model is proposed for optimal sectionalization of restoration subsystems in the first stage of power system restoration after a global blackout. The presented model focuses on the coordination between the generators' loading level and the pickup of critical loads. The global-best harmony search (GHS) is employed to solve the optimization model. Initial sectionalizing results as well as improvisation strategies considering power system characteristics are used to speed the solving procedure.

The developed model and method are demonstrated by both the New-England 39-bus system and the IEEE 118-bus system. In the proposed method, some important results such as the cranking time of each NBS generating unit and the pick-up time of each critical load are provided as well, so as to assist the system operators to effectively carry out the system restoration procedure.

6. ACKNOWLEDGEMENTS

This work is jointly supported by National High Technology Research and Development Program of China (863 Program) (2011AA05A105), and Hong Kong Polytechnic University.

7. REFERENCES

[1] Joo S K, Kim J C, Liu C C. Empirical analysis of the impact of 2003 blackout on security values of U.S. utilities and electrical equipment manufacturing firms. IEEE Trans. on Power Syst. 2007; 22(3):1012-1018.

[2] Enquiry Committee of India Ministry of Power. Report of the enquiry committee on grid disturbance in northern region on 30th July 2012 and in northern, eastern & north-eastern region on 31st July 2012. 2012; [Online]. Available: http://www.powermin.nic.in/pdf/GRID_ENQ_REP_16_8_12.pdf

[3] Adibi M M, Fink L H. Power system restoration planning. IEEE Trans. on Power Syst. 1994; 9(1):22-28.

[4] Hou Y, Liu C C, Sun K, Zhang P, Liu S, Mizumura D. Computation of milestones of decision support during system restoration. IEEE Trans. on Power Syst. 2011; 26(3):1399-1409.

[5] Sun W, Liu C C, Zhang L. Optimal generator start-up strategy for bulk power system restoration. IEEE Trans. on Power Syst. 2011; 26(3):1357-1366.

[6] Carvalho P M S, Ferreira L A F M, Barruncho L M F. Optimization approach to dynamic restoration of distribution systems. Int. J. Electr. Power Energ. Syst. 2007; 29(3): 222-229.

[7] Nagata T, Sasaki H. A multi-agent approach to power system restoration. IEEE Trans. on Power Syst. 2002; 17(2):457-462.

[8] Liu W J, Lin Z Z, Wen F S, Ledwich G. Analysis and optimisation of the preferences of decision-makers in black-start group decision-making. IET Gener. Transm. Distrib. 2013; 7(1):14-23.

[9] Qu H, Liu Y. Maximizing restorable load amount for specific substation during system restoration. Int. J. Electr. Power Energ. Syst. 2012; 43(1):1213-1220.

[10] Moreira C L, Resende F O, Lopes J A P. Using low voltage microgrids for service restoration. IEEE Trans. on Power Syst. 2007; 22(1):395-403.

[11] Kleinberg M R, Miu K, Chiang H D. Improving service restoration of power distribution systems through load curtailment of in-service customers. IEEE Trans. on Power Syst. 2011; 26(3):1110-1117.

[12] Zeng S, Lin Z, Wen F, Ledwich G. A new approach for power system black-start decision-making with vague set theory. Int. J. Electr. Power Energ. Syst. 2012; 34(1):114-120.

[13] Joglekar J J, Nerkar Y P. A different approach in system restoration with special consideration of islanding schemes. Int. J. Electr. Power Energ. Syst. 2008; 30(9): 519-524.

[14] Abidi M M, Brokoski J N, Kafka R J. Power system restoration—the second task force report. IEEE Trans. on Power Syst. 1987; 2(4):927-932.

[15] Xu G Y, Vittal V, Meklin A, Thalman J E. Controlled islanding demonstrations on the WECC system. IEEE Trans. on Power Syst. 2011; 26(1):334-343.

[16] Yang B, Vittal V, Heydt G T. Slow-coherency-based controlled islanding - a demonstration of the approach on the August 14, 2003 blackout scenario. IEEE Trans. on Power Syst. 2006; 21(4):1840-1847.

[17] Lin Z, Xia T, Ye Y, Zhang Y, Chen L, Liu Y, Tomsovic K, Bilke T, Wen F. Application of wide area measurement systems to islanding detection of bulk power system. IEEE Trans. on Power Syst. 2013; 28(2):2006-2015.

[18] Liu W, Lin Z, Wen F, Ledwich G. A wide area monitoring system based load restoration method. IEEE Trans. on Power Syst. 2013; 28(2):2025-2034.

[19] Ihara S, Schweppe F C. Physically based modeling of cold load pickup. IEEE Trans. on Power App. Syst. 1981; PAS-100(9):4142-4150.

[20] Aubin J, Bergeron R, Morin R. Distribution transformer overloading capability under cold-load pickup conditions. IEEE Trans. on Power Del. 1990; 5(4):1883-1891.

[21] Sun W, Liu C C, Liu S. Black start capability assessment in power system restoration. In: Proc. IEEE Power Eng. Soc. General Meeting, San Diego, CA, U.S., July 24-29, 2011, p. 1-7.

[22] Kearsley R. Restoration in Sweden and experience gained from the blackout of 1983. IEEE Trans. on Power Syst. 1987; 2(2):422-428.

[23] Omran M G H, Mahdavi M. Global-best harmony search. Appl. Math. Comput. 2008; 198(2):643-656.

[24] Wei L, Guo W, Wen F, Ledwich G, Liao Z, Xin J. Waveform matching approach for fault diagnosis of high voltage transmission lines employing harmony search algorithm. IET Gener. Transm. Distrib. 2010; 4(7):801-809.

[25] Wang C, Vittal V, Kolluri V S, Mandal S. PTDF-based automatic restoration path selection. IEEE Trans. on Power Syst. 2010; 25(3):1686-1695.

[26] Wang C, Vittal V, Sun K. OBDD-based sectionalizing strategies for parallel power system. IEEE Trans. on Power Syst. 2011; 26(3):1426-1433.

[27] Lin Z Z, Wen F S, Chung C Y, Wong K P, Zhou H. Division algorithm and interconnection strategy of restoration subsystems based on complex network theory. IET Gener. Transm. Distrib. 2011; 5(6):674-683.

[28] Liu Y, Gu X. Skeleton-network reconfiguration based on topological characteristics of scale-free networks and discrete particle swarm optimization. IEEE Trans. on Power Syst. 2007; 22(3):1267-1274.

[29] Sarmadi S A N, Dobakhshari A S, Azizi S, Ranjbar A M. A sectionalizing method in power system restoration based on WAMS. IEEE Trans. on Smart Grid. 2011; 2(1):190-197.

[30] Adibi M M, Milanicz D P. Estimating restoration duration. IEEE Trans. on Power Syst. 1999; 14(4):1493-1498.